DoorBird
Technology meets Design.

D2101KV/D2101FV EKEY surface mounting housing (backbox)

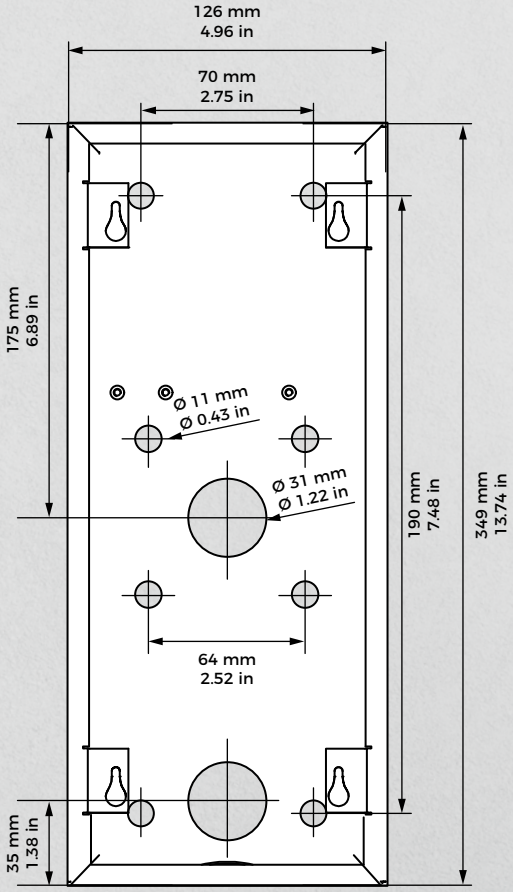

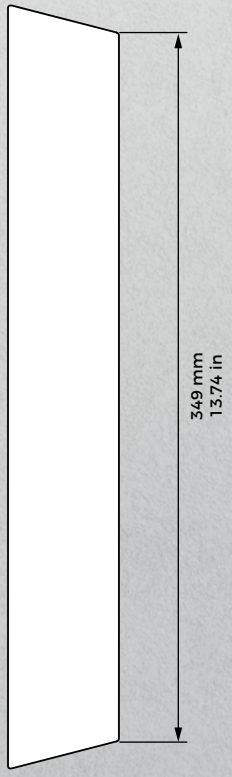

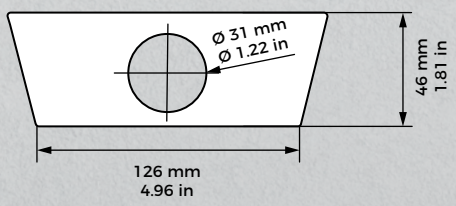

Errors and omissions excepted. | Last update 05/2021 - Copyright © 2021 Bird Home Automation GmbH – www.doorbird.com